WARNING:

1. Ensure that any installation and maintenance is performed by a qualified electrican and that luminaire is wired in accordance to the latest IEE electrical regulations or the local equipments.

2. Ensure that the power supply is off before installation and maintenance and not switched on until the installation or maintenance is completed.

3. The light source contained in this luminaire shall only be replaced by the manufacturer or his service agent or a similar qualified person.



Caution: Risk of electric shock.

4. Do not apply force to the surface of the luminaire during installation.

5. If the external flexible cord of this luminaire is damaged, it shall be exclusively replaced by the manufacturer or his service agent or a similar qualified person in order to avoid a hazard.

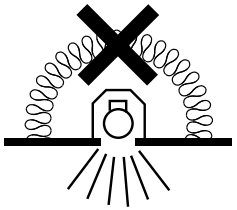

The luminaire cannot be covered with thermal insulation matting or similar materials.

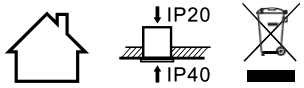

Tridonic GmbH & Co KG
Faerbergasse 15
6851 Dornbirn / Austria

LED PANEL LIGHT

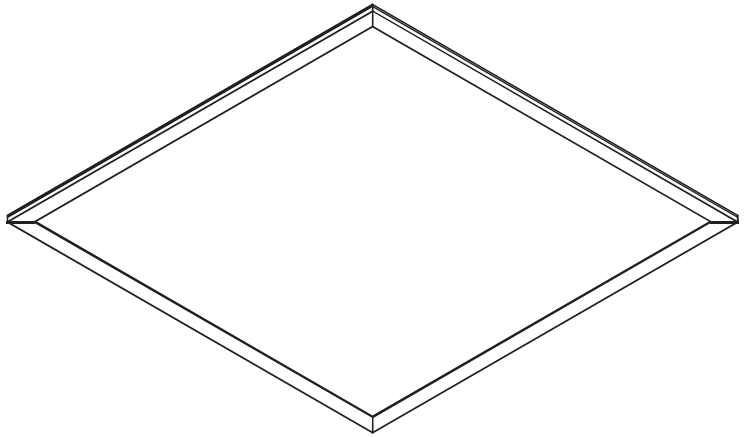

- Please read instruction carefully before assembling and installation.
- Please keep instruction as reference in the future.

TRIDONIC

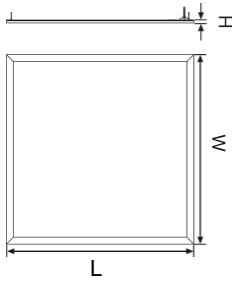

Tridonic article number	Material Desription (short text)	Vrated	LxWxH (mm)
28003274	ELA 600x600mm 3800lm 830 ADV2	39VDC	595x595x8.5
28003275	ELA 600x600mm 3800lm 840 ADV2		
28003276	ELA 600x600mm 3800lm 865 ADV2		
28003277	ELA 625x625mm 3800lm 830 ADV2		620x620x8.5
28003278	ELA 625x625mm 3800lm 840 ADV2		
28003279	ELA 1200x300mm 3800lm 830 ADV2		1195x295x8.5
28003280	ELA 1200x300mm 3800lm 840 ADV2		
28003281	ELA 1200x300mm 3800lm 865 ADV2		
28003282	ELA 600x600mm 3800lm 827-865 ADV2	35VDC	595x595x8.5
28003283	ELA 600x600mm 3800lm 830 ADV2 TPA	39VDC	
28003284	ELA 600x600mm 3800lm 840 ADV2 TPA		
28003285	ELA 600x600mm 3800lm 830 SNC2	40VDC	
28003286	ELA 600x600mm 3800lm 840 SNC2		
28003287	ELA 600x600mm 3800lm 865 SNC2		

Recessed mount

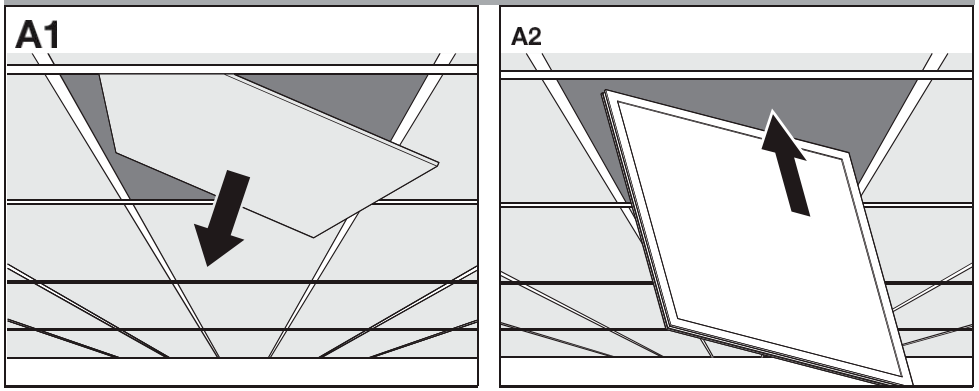

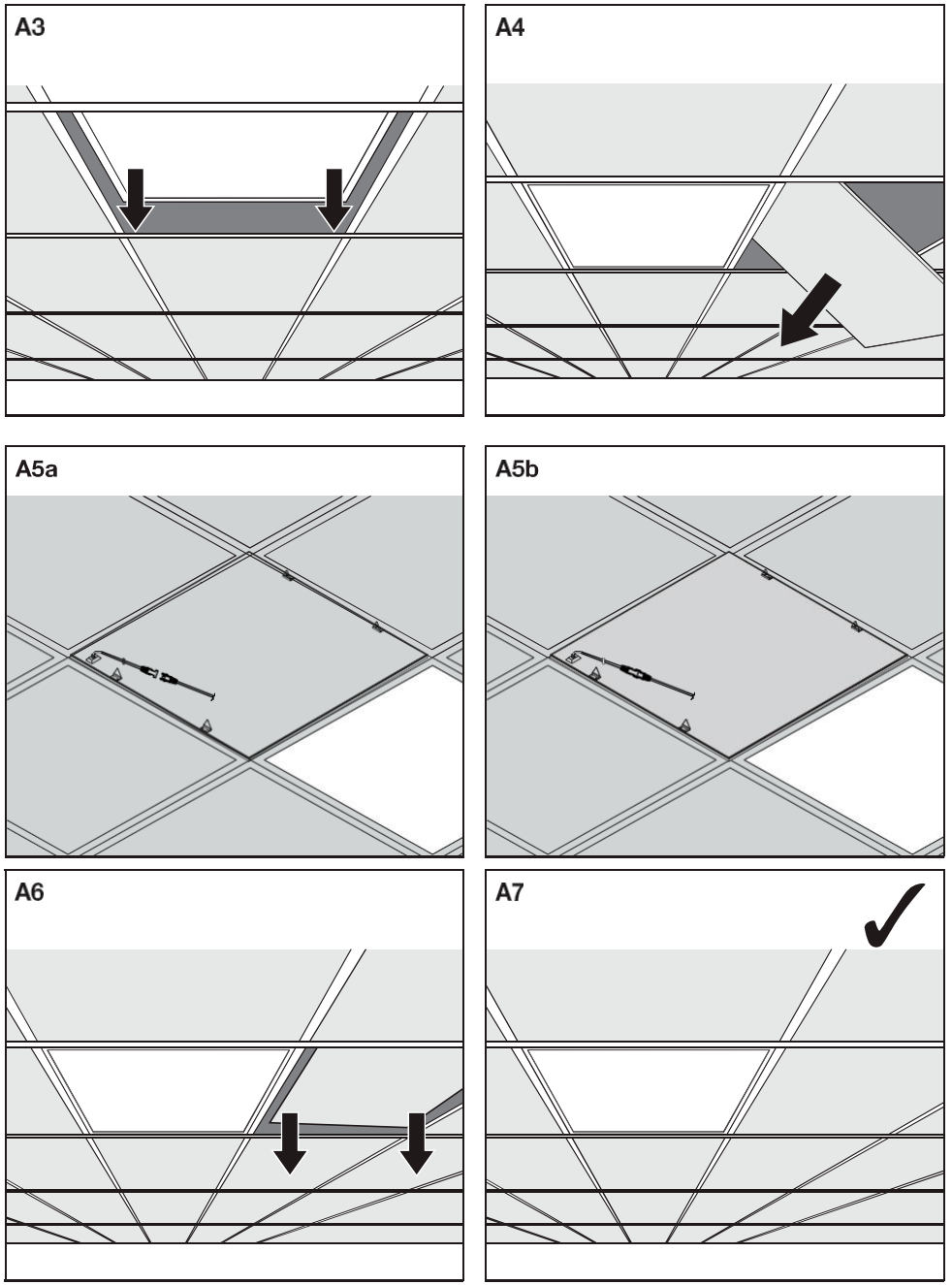

Suspension mount

B1

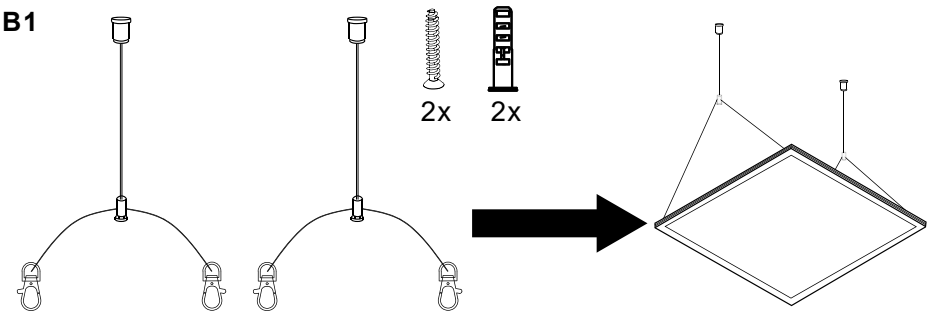

B2

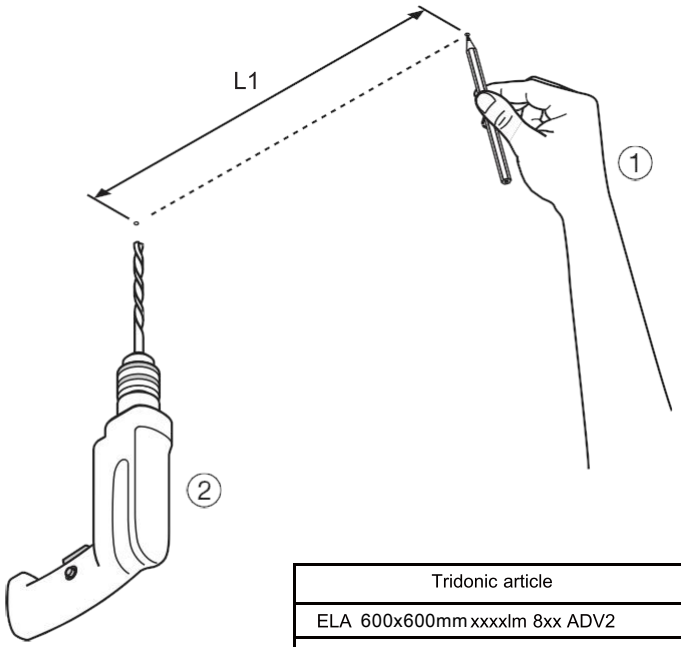

Tridonic article	L1(mm)
ELA 600x600mm xxxxlm 8xx ADV2	501
ELA 620x620mm xxxxlm 8xx ADV2	526
ELA 1200x300mm xxxxlm 8xx ADV2	695
ELA 600x600mm xxxxlm 8xx SNC2	501
ELA 600x600mm xxxxlm 8xx ADV2 TPA	501

B3

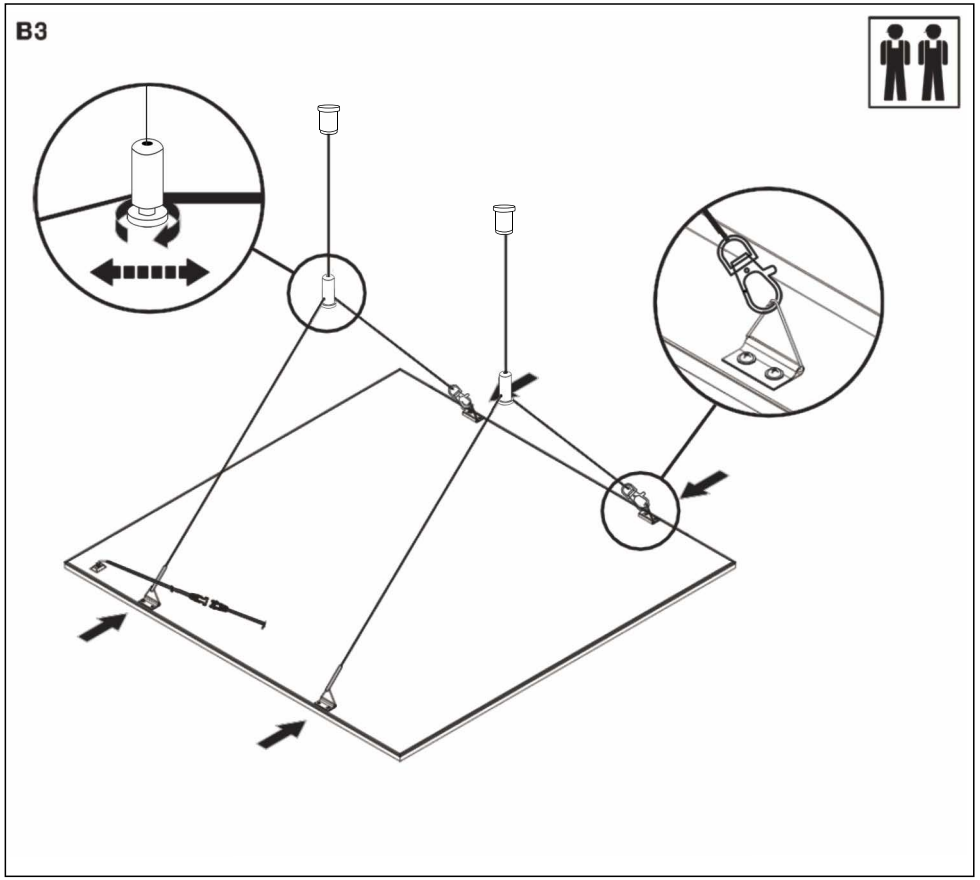

B4

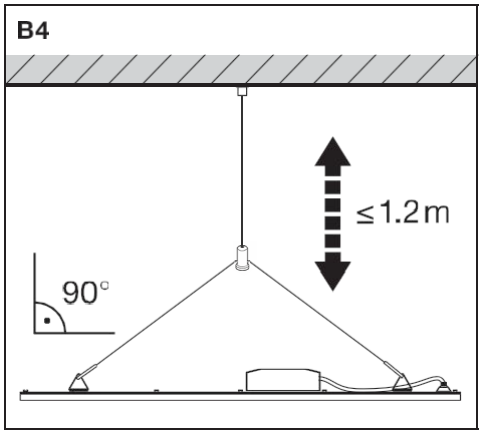

B5

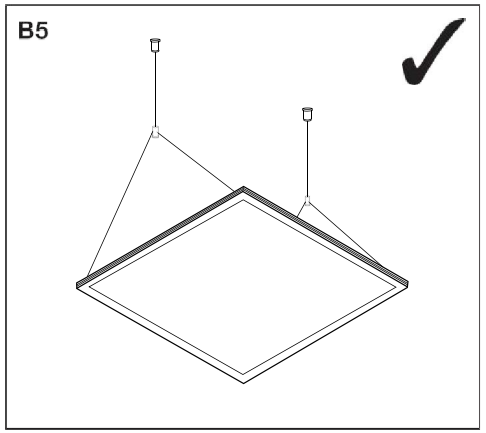

Surface mount 6060/6262

C

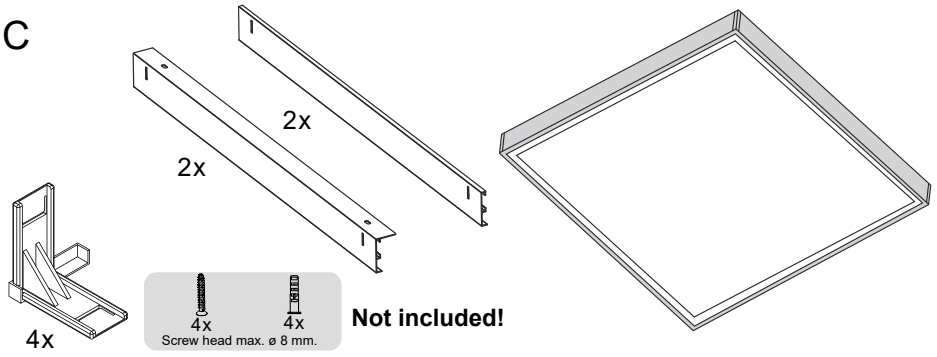

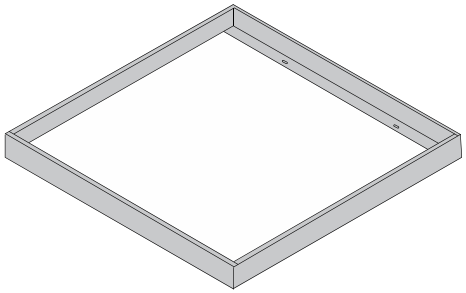

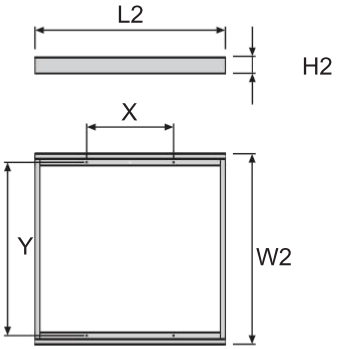

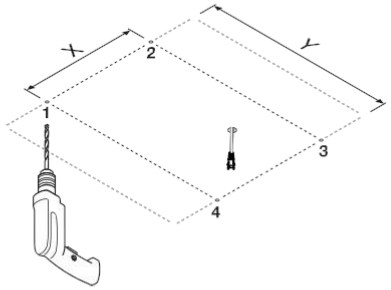

Tridonic article	L2xW2xH2(mm)	X(mm)	Y(mm)
ELA 600x600mm xxxxlm 8xx ADV2	601x601x43	386	586
ELA 620x620mm xxxxlm 8xx ADV2	626x626x43	411	611
ELA 600x600mm xxxxlm 8xx SNC2	601x601x43	386	586
ELA 600x600mm xxxxlm 8xx ADV2 TPA	601x601x43	386	586

C1

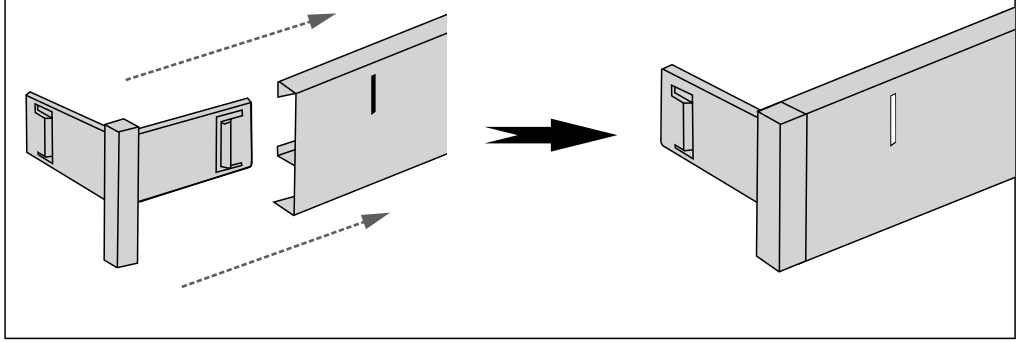

C2

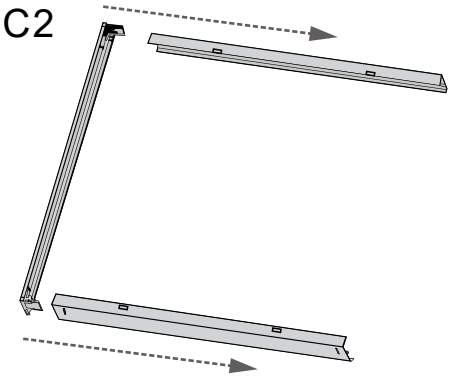

C3

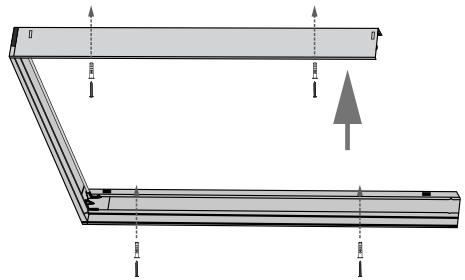

C4

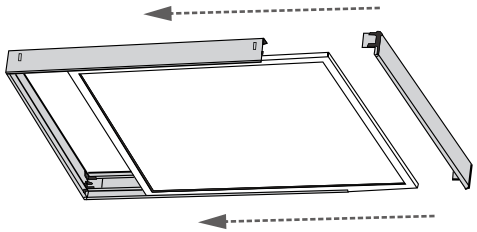

C5

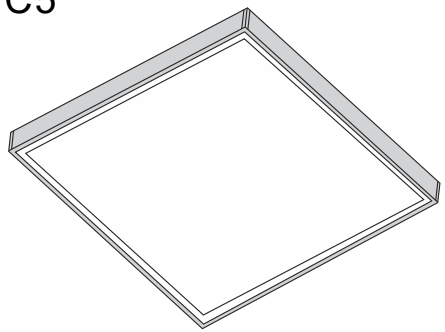

Surface mount 30120

C

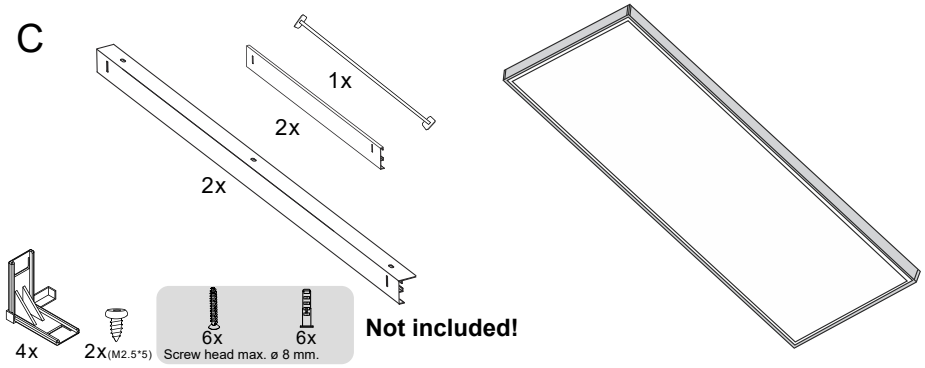

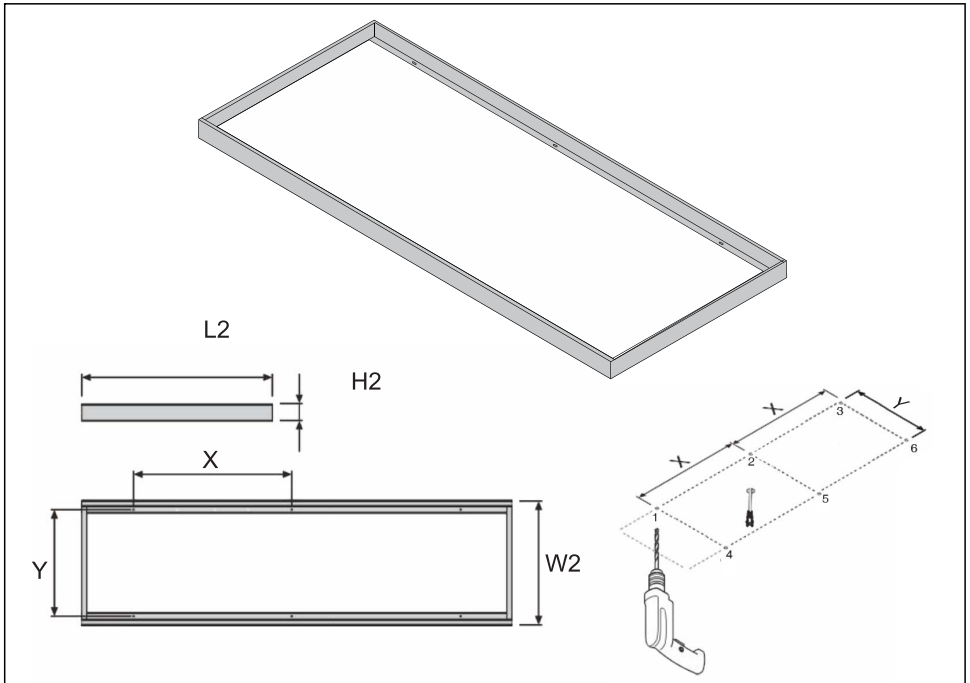

Tridonic article	L2xW2xH2(mm)	X(mm)	Y(mm)
ELA 1200x300mm xxxxlm 8xx ADV2	1201x301x43	493	286

C1

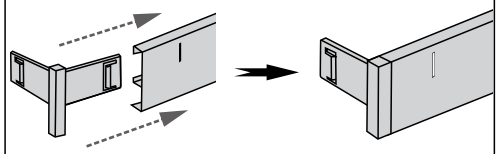

C2

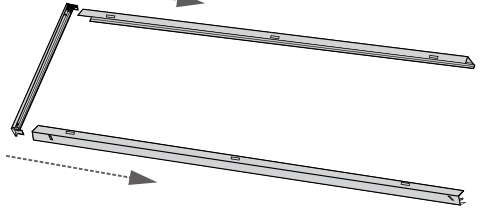

C3 The aluminum profiles must be mounted exactly parallel to each other and square to the mounting surface.

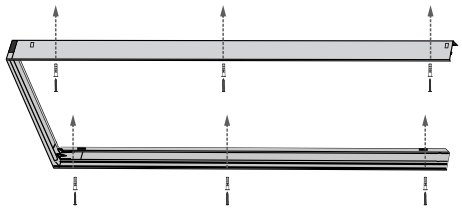

C4

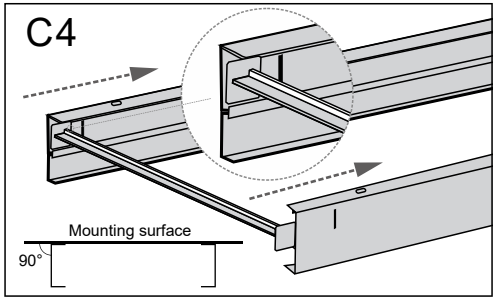

C5

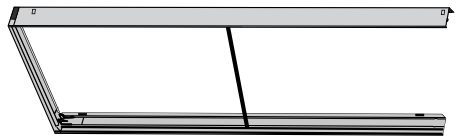

C6 2x(M2.5*5)

To avoid the fix holder from moving freely use the screws supplied for fixation.

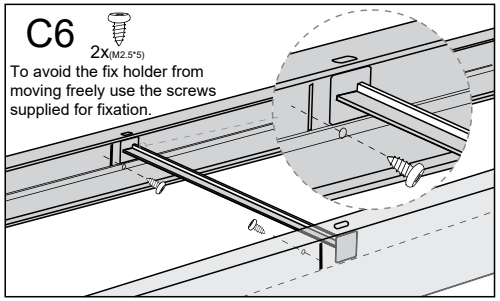

C7

Keep lead connector on the outer side to allow connecting driver and module after inserting ELA into the surface mount frame.

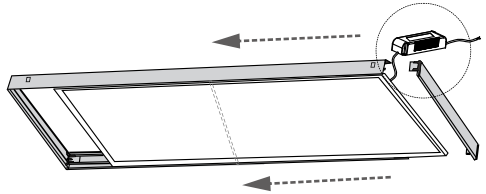

C8

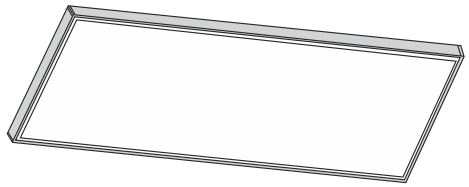

3way CCT- SWITCH

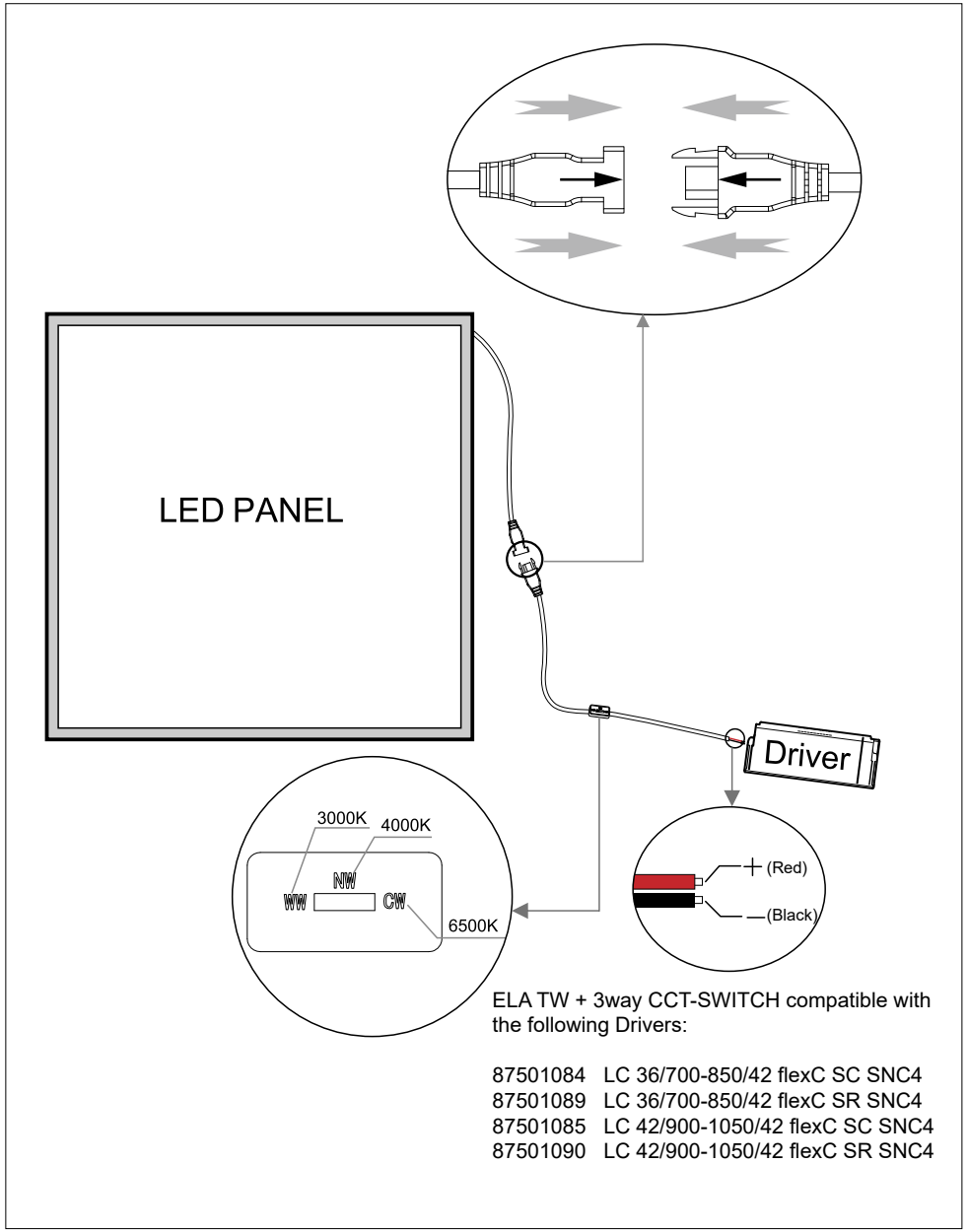

ELA TW + 3way CCT-SWITCH compatible with the following Drivers:

87501084 LC 36/700-850/42 flexC SC SNC4
87501089 LC 36/700-850/42 flexC SR SNC4
87501085 LC 42/900-1050/42 flexC SC SNC4
87501090 LC 42/900-1050/42 flexC SR SNC4

2 Channel Dimming Driver

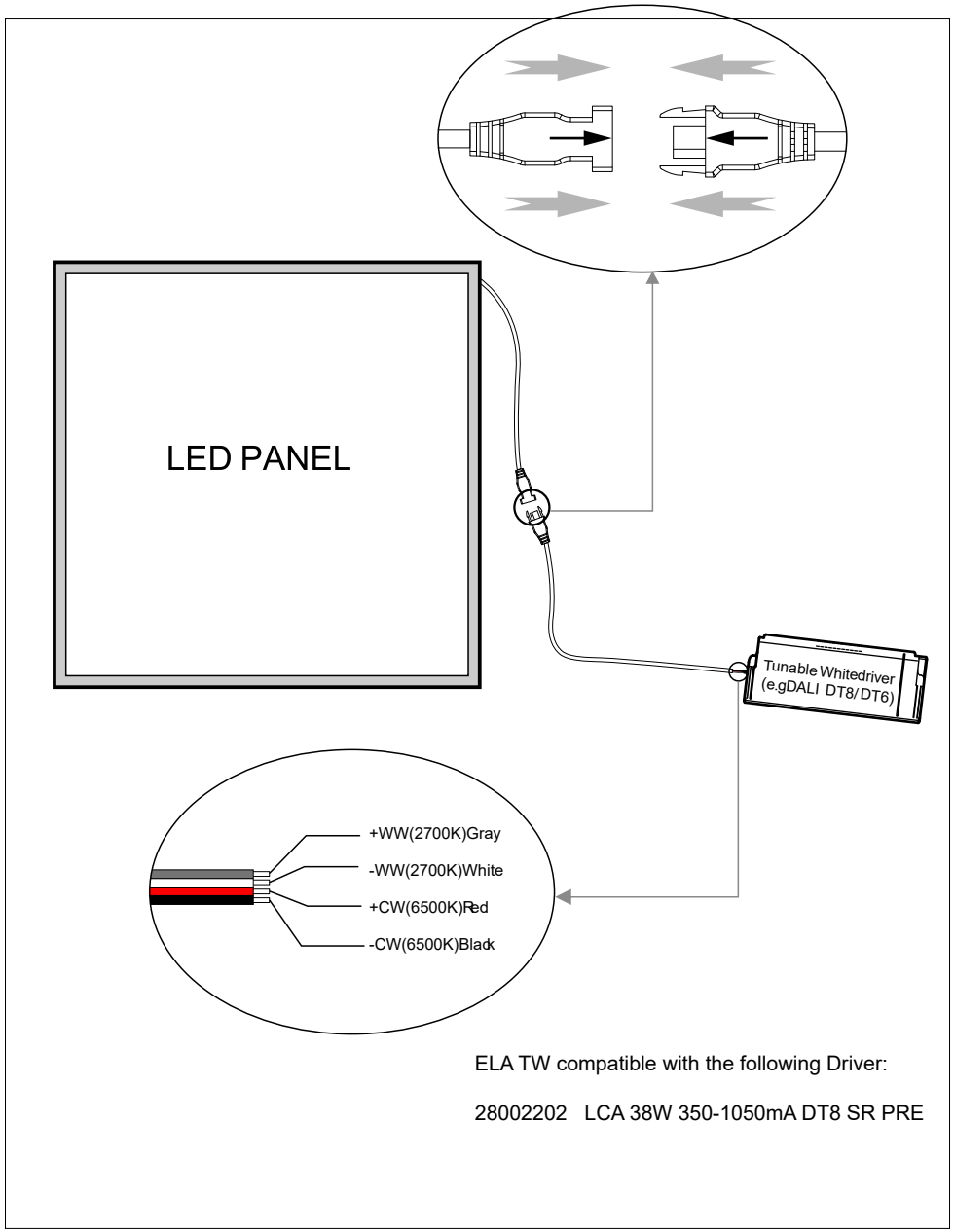

ELA TW compatible with the following Driver:

28002202 LCA 38W 350-1050mA DT8 SR PRE